PENSKE EXPANSION

SITE PLAN

LOT 1, BLOCK 1, PENSKE SUBDIVISION FILING NO. 2

SITUATED IN THE NW 1/4 OF SECTION 29, T.3S., R.66W. OF THE 6TH P.M.
CITY OF AURORA, COUNTY OF ADAMS, STATE OF COLORADO

The site plan will not be approved by public works until the preliminary drainage letter/report is approved

CITY OF AURORA SITE PLAN NOTES:

1. THE DEVELOPER, HIS OR HER SUCCESSORS, AND ASSIGNS SHALL BE RESPONSIBLE FOR INSTALLATION, MAINTENANCE, AND REPLACEMENT OF THE ACCESS CONTROL GATE OR BARRIER SYSTEM TO ENSURE EMERGENCY VEHICLE ACCESS TO WITHIN THE IF THE ABOVE CONDITIONS ARE NOT MET, THE OWNERS, HIS OR HER SUCCESSORS, AND ASSIGNS, SHALL BE REQUIRED BY FIRE DEPARTMENT ORDER NOTICE THAT ALL AFFECTED GATES WILL BE CHAINED AND LOCKED IN THE OPEN POSITION UNTIL REPAIRED OR REPLACED, AND RETESTED. IF THE GATING SYSTEM IS NOT MAINTAINED TO THE SATISFACTION OF THE FIRE DEPARTMENT, THE LICENSE AGREEMENT FOR THE EMERGENCY VEHICLE GATE OPENING SYSTEM WILL BE REVOKED AND THE GATING SYSTEM MUST BE REMOVED. THE GATING SYSTEM WILL INCLUDE AN EMERGENCY VEHICLE GATE OPENING SYSTEM UTILIZING A REDUNDANCY BACK-UP SYSTEM THAT CONSISTS OF; A) SIREN OPERATED SYSTEM; B) AUTOMATIC KNOX KEY SWITCH; AND C) MANUAL OVERRIDE (IN THE EVENT OF SYSTEM FAILURE). GATING SYSTEMS WILL BE INSTALLED IN ACCORDANCE WITH THE "GATING SYSTEMS CROSSING FIRE APPARATUS ACCESS ROADS CHECKLIST". A SEPARATE BUILDING PERMIT THROUGH THE BUILDING DIVISION IS REQUIRED TO BE OBTAINED BY THE CONTRACTOR PRIOR TO THE INSTALLATION OF ANY GATING/BARRIER SYSTEM THAT CROSSES A DEDICATED FIRE LANE EASEMENT.

2. ACCESSIBLE EXTERIOR ROUTES" SHALL BE PROVIDED FROM PUBLIC TRANSPORTATION STOPS, ACCESSIBLE PARKING AND ACCESSIBLE PASSENGER LOADING ZONES AND PUBLIC SIDEWALKS TO 60% OF THE ACCESSIBLE BUILDING ENTRANCE THEY SERVE. THE ACCESSIBLE ROUTE BETWEEN ACCESSIBLE PARKING AND ACCESSIBLE BUILDING ENTRANCES SHALL BE THE MOST PRACTICAL DIRECT THE ACCESSIBLE ROUTE MUST BE LOCATED WITHIN A SIDEWALK. NO SLOPE ALONG THIS ROUTE MAY EXCEED 1:20 WITHOUT PROVIDING A RAMP WITH A MAXIMUM SLOPE OF 1:12 AND HANDRAILS. CROSSWALKS ALONG THIS ROUTE SHALL BE WIDE ENOUGH TO WHOLLY CONTAIN THE CURB RAMP WITH A MINIMUM WIDTH OF 36" AND SHALL BE PAINTED WITH WHITE STRIPES. THE CITY OF AURORA ENFORCES ACCESSIBILITY REQUIREMENTS BASED ON THE 2015 INTERNATIONAL BUILDING CODE, CHAPTER 11, AND THE ICC A117.1-2009.

3. ALL BUILDING ADDRESS NUMBERS SHALL COMPLY WITH THE AURORA CITY CODE, CHAPTER 126, ARTICLE VII -NUMBERING OF BUILDINGS.

4. THE DEVELOPER, HIS SUCCESSORS AND ASSIGNS SHALL BE RESPONSIBLE FOR INSTALLATION, MAINTENANCE AND REPLACEMENT OF FIRE LANE EASEMENTS CONSTRUCTED WITHIN THIS SITE USING ALTERNATIVE SURFACING MATERIALS SUCH AS, BUT NOT LIMITED TO; GRASSPAVE, GRASS CRETE, RITTER RINGS, INVISIBLE STRUCTURES UTILIZED ONLY FOR EMERGENCY VEHICLE ACCESS USE. THIS AGREEMENT WILL INCLUDE SNOW REMOVAL TO ENSURE EMERGENCY ACCESS IS AVAILABLE AT ALL TIMES. IF THE ABOVE CONDITIONS ARE NOT MET, THE OWNERS, HIS SUCCESSORS AND ASSIGNS SHALL BE REQUIRED BY ORDER NOTICE FROM THE AURORA FIRE DEPARTMENT TO REMOVE THE INVISIBLE STRUCTURE AND REPLACE IT WITH AN ASPHALT OR CONCRETE ROAD SURFACE THAT MEETS THE CONSTRUCTION REQUIREMENTS OF THE PUBLIC WORKS DEPARTMENT FIRE LANE STANDARDS AND BE SHOWN IN DETIAL WITHIN THE CIVIL PLANS.
5. THE APPLICANT HAS THE OBLIGATION TO COMPLY WITH ALL APPLICABLE REQUIREMENTS OF THE AMERICANS WITH DISABILITIES ACT.

6. EMERGENCY INGRESS AND EGRESS - RIGHT-OF-WAY FOR INGRESS AND EGRESS FOR SERVICE AND EMERGENCY VEHICLES IS GRANTED OVER, ACROSS, ON AND THROUGH ANY AND ALL PRIVATE ROADS AND WAYS NOW OR HEREAFTER ESTABLISHED ON THE DESCRIBED PROPERTY, AND THE SAME ARE HEREBY DESIGNATED AS "SERVICE/EMERGENCY AND UTILITY EASEMENTS" AND SHALL BE POSTED "NO PARKING – FIRE LANE".

7. RIGHT-OF-WAY FOR INGRESS AND EGRESS FOR SERVICE AND EMERGENCY VEHICLES IS GRANTED OVER, ACROSS, ON AND THROUGH ANY AND ALL PRIVATE ROADS AND WAYS NOW OR HEREAFTER ESTABLISHED ON THE DESCRIBED PROPERTY. THE UNDERSIGNED DOES HEREBY COVENANT AND AGREE THAT THEY SHALL CONSTRUCT UPON THE FIRE LANE EASEMENTS, AS DEDICATED AND SHOWN HERE ON, A HARD SURFACE IN ACCORDANCE WITH THE CITY OF AURORA'S PAVING STANDARDS FOR FIRE LANE EASEMENTS, AND THAT THEY SHALL MAINTAIN THE SAME IN A STATE OF GOOD REPAIR AT ALL TIMES AND KEEP THE SAME FREE AND CLEAR OF ANY STRUCTURES, FENCES, LANDSCAPE MATERIALS, SNOW OR OTHER OBSTRUCTIONS. THE MAINTENANCE OF PAVING ON THE FIRE LANE EASEMENT(S) IS THE RESPONSIBILITY OF THE OWNER, AND THE OWNER SHALL POST AND MAINTAIN APPROPRIATE SIGNS IN CONSPICUOUS PLACES ALONG SUCH FIRE LANE EASEMENTS, STATING "FIRE LANE, NO PARKING." THE LOCAL LAW ENFORCEMENT AGENCY(S) IS HEREBY AUTHORIZED TO ENFORCE PARKING REGULATIONS WITHIN THE FIRE LANE EASEMENTS, AND TO CAUSE SUCH EASEMENTS TO BE MAINTAINED FREE AND UNOBSTRUCTED AT ALL TIMES FOR FIRE DEPARTMENT AND EMERGENCY APPARATUS USE.

8. THE DEVELOPER, HIS SUCCESSORS AND ASSIGNS, INCLUDING THE HOMEOWNERS OR MERCHANTS ASSOCIATION SHALL BE RESPONSIBLE FOR INSTALLATION, MAINTENANCE AND REPLACEMENT OF ALL FIRE LANE SIGNS.

9. RIGHT OF WAY FOR INGRESS AND EGRESS FOR SERVICE AND EMERGENCY VEHICLES IS GRANTED OVER, ACROSS, ON AND THROUGH ANY AND ALL PRIVATE ROADS AND WAYS NOW OR HEREAFTER ESTABLSHIED ON THE DESCRIBED PROPERTY, AND THE SAME ARE HEREBY DESIGNATED AS "SERVICE/EMERGENCY AND UTILITY EASEMENTS AND SHALL BE POSTED "NO PARKING – FIRE LANE".

10. EXCEPT FOR THE SALE OF GOODS AND SERVICES BY THE FACILITY MANAGEMENT, NO PRIVATE BUSINESSES, COMMERCIAL SALES, MANUFACTURING, FABRICATING, OR ASSEMBLY OF ANY ITEMS SHALL BE CONDUCTED WITHIN ANY STORAGE UNIT ON SITE WITHOUT FIRST OBTAINING THE PROPER BUSINESS LICENSES AND BUILDING PERMITS. PRIOR TO THE OCCUPANCY OF ANY STORAGE UNIT THE SPACE SHALL BE IN CONFORMANCE WITH ALL ADOPTED CODES, STANDARDS AND REQUIREMENTS OF THE CITY OF AURORA. NO HAZARDOUS MATERIALS, FLAMMABLE, CAUSTIC, EXPLOSIVE, POISONOUS, RADIOACTIVE OR OTHERWISE DANGEROUS MATERIALS SHALL BE STORED ON SITE OR WITHIN ANY STORAGE UNIT.

11. IN LOCATIONS WHERE UTILITY EASEMENTS OVERLAP DRAINAGE EASEMENTS, ONLY SUBSURFACE UTILITIES SHALL BE PERMITTED WITHIN THE PORTION OF THE UTILITY EASEMENT THAT OVERLAPS THE DRAINAGE EASEMENT. INSTALLATION OF ABOVE GROUND UTILITIES WITHIN A DRAINAGE EASEMENT REQUIRES PRIOR WRITTEN APPROVAL BY CITY ENGINEER.

12. ALL CROSSINGS OR ENCROACHMENTS INTO EASEMENTS AND RIGHTS-OF-WAY OWNED BY THE CITY OF AURORA ("CITY") IDENTIFIED AS BEING PRIVATELY-OWNED AND MAINTAINED HEREIN ARE ACKNOWLEDGED BY THE UNDERSIGNED AS BEING SUBJECT TO CITY'S USE AND OCCUPANCY OF SAID EASEMENTS OR RIGHTS-OF-WAY. THE UNDERSIGNED, ITS SUCCESSORS AND ASSIGNS, FURTHER AGREES TO REMOVE, REPAIR, REPLACE, RELOCATE, MODIFY, OR OTHERWISE ADJUST SAID CROSSINGS OR ENCROACHMENTS UPON REQUEST FROM THE CITY AND AT NO EXPENSE TO THE CITY. THE CITY RESERVES THE RIGHT TO MAKE FULL USE OF THE EASEMENTS AND RIGHTS-OF-WAY AS MAY BE NECESSARY OR CONVENIENT AND THE CITY RETAINS ALL RIGHTS TO OPERATE, MAINTAIN, INSTALL, REPAIR, REMOVE OR RELOCATE ANY CITY FACILITIES LOCATED WITHIN SAID EASEMENTS AND RIGHTS-OF-WAY AT ANY TIME AND IN SUCH A MANNER AS IT DEEMS NECESSARY OR CONVENIENT.

13. ARCHITECTURAL FEATURES (I.E. BAY WINDOWS, FIREPLACES, ROOF OVERHANG, GUTTERS, EAVES, FOUNDATION, FOOTINGS, CANTILEVERED WALLS, ETC.) ARE NOT ALLOWED TO ENCROACH INTO ANY EASEMENT OR FIRE LANE.

14. THE DEVELOPER IS RESPONSIBLE FOR SIGNING AND STRIPING ALL PUBLIC STREETS. THE DEVELOPER IS REQUIRED TO PLACE TRAFFIC CONTROL, STREET NAME, AND GUIDE SIGNS ON ALL PUBLIC STREETS AND PRIVATE STREETS APPROACHING AN INTERSECTION WITH A PUBLIC STREET. SIGNS SHALL BE FURNISHED AND INSTALLED PER THE MOST CURRENT EDITIONS OF THE MANUAL ON UNIFORM TRAFFIC CONTROL DEVICES (MUTCD) AND CITY STANDARDS, AND SHOWN ON THE SIGNING AND STRIPING PLAN FOR THE DEVELOPMENT.

15. THE APPROVAL OF THIS DOCUMENT DOES NOT CONSTITUTE FINAL APPROVAL OF GRADING, DRAINAGE, UTILITY, PUBLIC IMPROVEMENTS AND BUILDING PLANS. CONSTRUCTION PLANS MUST BE REVIEWED AND APPROVED BY THE APPROPRIATE AGENCY PRIOR TO THE ISSUANCE OF BUILDING PERMITS.

Note Added.

Add the following note: The streetlight or pedestrian light installation within the public right-of-way shall be designed, funded, and constructed by the developer/owner. Ownership and maintenance of the street/pedestrian lights shall be the responsibility of the City of Aurora once they have been accepted. Street light and/or pedestrian photometrics plans shall be prepared and submitted to the City for review and approval and shall become a part of the approved civil construction plans for the project. An electrical plan showing site location of lights, electrical one line and grounding details shall be submitting to the Permit Center for review by the Building Department. The owner is responsible for obtaining an address for the meter(s) from the Planning Department. A Building Permit for the meter and a Public Inspections Permit for the street lights are required. Certificate of occupancies will not be issued until the street and/or pedestrian lighting plans are approved, constructed, and initially accepted.

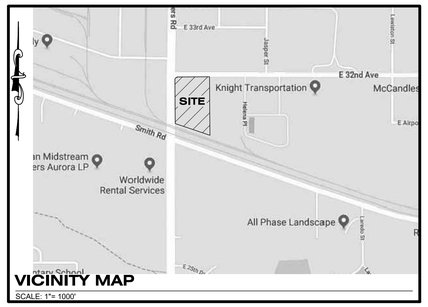

VICINITY MAP
SCALE: 1"= 1000'

SHEET INDEX

1 OF 7	COVER SHEET
2 OF 7	OVERALL SITE PLAN
3 OF 7	GRADING AND UTILITY PLAN
4 OF 7	LANDSCAPE PLAN
5 OF 7	LANDSCAPE NOTES
6 OF 7	PHOTOMETRIC PLAN
7 OF 7	PHOTOMETRIC DETAILS

CONTACTS:

OWNER:
PENSKE TRUCK LEASING CO., L.P.
5 CAPITAL DRIVE, SUITE 202
HARRISBURG, PENNSYLVANIA 17110
PHONE: (844) 847-9518
ATTN: SEAN YENTSCH

CIVIL ENGINEER:
ENGINEERING SERVICE COMPANY
14190 EAST EVANS AVENUE
AURORA, COLORADO 80014
PHONE: (303) 337-1393
ATTN: CHAD M. ANDERSON, PE

LAND SURVEYOR:
ENGINEERING SERVICE COMPANY
14190 EAST EVANS AVENUE
AURORA, COLORADO 80014
PHONE: (303) 337-1393
ATTN: CHARLES N. BECKSTROM, PLS

LANDSCAPE ARCHITECT:
JIMENEZ DESIGN GROUP, LLC
314 WEST ROSE FINCH CIRCLE
HIGHLANDS RANCH, CO 80129
PHONE: (303) 736-8259
ATTN: JULIO JIMENEZ, RLA

SITE DATA

TOTAL LAND AREA WITHIN PROPERTY LINES: 5.10 ACRES (222,281 SQ FT)

PRESENT ZONING CLASSIFICATION: I-1, "BUSINES/TECH DISTRICT"

NUMBER OF BUILDINGS: 0

TOTAL BUILDING COVERAGE: 0 SQUARE FEET OR 0%

SIGNAGE: FOR ALL SIGNAGE, REFER TO PENSKE CENTER SITE PLAN, CASE NUMBER 2000-6030-01.

HARD SURFACE AREA: 152,678 SQ FT (68.7%)

LANDSCAPE AREA: 69,603 SQ FT (31.3%)

PERMITTED TOTAL NUMBER OF SIGNS: N/A
PERMITTED SIGN AREA: N/A
PROPOSED MAX. TOTAL SIGN AREA: N/A
PROPOSED NUMBER OF SIGNS: 0

PARKING SPACES REQUIRED: 0 SPACES

PARKING SPACES PROVIDED: 68 - 12'x30' SPACES
92 - 12'X34' SPACES
13 - 12'X60' SPACES
173 TOTAL SPACES (NOT PUBLIC PARKING)

HANDICAP SPACES REQUIRED: 0 SPACES

HANDICAP SPACES PROVIDED: 0 SPACES (0 VAN ACCESSIBLE)

LOADING SPACES REQUIRED: 0

LOADING SPACES PROVIDED: 0

BICYCLE PARKING REQUIRED: 0

BICYCLE PARKING PROVIDED: 0

Remove the PC line item, as this application can now be reviewed administratively.

Revised

OWNER'S CERTIFICATE

SITE ADDRESS: VACANT LAND

THIS SITE PLAN AND ANY AMENDMENTS HERETO, UPON APPROVAL BY THE CITY OF AURORA AND RECORDING, SHALL BE BINDING UPON THE APPLICANTS THEREFORE, THEIR SUCCESSORS, AND ASSIGNS. THIS PLAN SHALL LIMIT AND CONTROL THE ISSUANCE AND VALIDITY OF ALL BUILDING PERMITS, AND SHALL RESTRICT AND LIMIT THE CONSTRUCTION, LOCATION, USE, OCCUPANCY, AND OPERATION OF ALL LAND AND STRUCTURES WITHIN THIS PLAN TO ALL CONDITIONS, REQUIREMENTS, LOCATIONS, AND LIMITATIONS SET FORTH HEREIN. ABANDONMENT, WITHDRAWAL, OR AMENDMENT OF THIS PLAN MAY BE PERMITTED ONLY UPON APPROVAL OF THE CITY OF AURORA.

IN WITNESS THEREOF PENSKE TRUCK LEASING CO., LP HAS CAUSED THESE PRESENTS TO BE EXECUTED THIS _____ DAY OF _____, 20_____ A.D.

PENSKE TRUCK LEASING CO., LP, A DELAWARE LIMITED PARTNERSHIP

_____
NAME AND TITLE

STATE OF _____)
) §
COUNTY OF _____)

THE FOREGOING INSTRUMENT WAS ACKNOWLEDGED BEFORE ME THIS _____ DAY OF _____, 20_____ A.D., BY _____.

WITNESS MY HAND AND OFFICIAL SEAL:

_____
NOTARY PUBLIC

MY COMMISSION EXPIRES: _____ ADDRESS: _____
_____

CITY OF AURORA APPROVALS

CITY ATTORNEY: _____ DATE: _____

PLANNING DIRECTOR: _____ DATE: _____

PLANNING COMMISSION: _____ DATE: _____
CHAIRPERSON

ATTEST: _____ DATE: _____
CITY CLERK

DATABASE APPROVAL DATE: _____

RECORDER'S CERTIFICATE

ACCEPTED FOR FILING IN THE OFFICE OF THE CLERK AND RECORDER OF ADAMS COUNTY, COLORADO AT _____ O'CLOCK _____.M. THIS _____ DAY OF _____, 20_____ A.D.

_____ _____
CLERK AND RECORDER: DEPUTY:

LEGAL DESCRIPTION

LOT 1, BLOCK 1 PENSKE SUBDIVISION FILING NO. 2
SITUATED IN THE NW 1/4 OF SECTION 29, T.3S., R.66W. OF THE 6TH P.M.
CITY OF AURORA, COUNTY OF ADAMS, STATE OF COLORADO

Add an amendments block here

Added.

AMENDMENTS

Client:
PENSKE TRUCK LEASING CO., L.P.
5 CAPITAL DRIVE, SUITE 202
HARRISBURG, PENNSYLVANIA 17110-9477
ATTN: SEAN YENTSCH
PHONE: (844) 847-9518

No.:	Description:	Date:
	INITIAL SUBMITTAL	2019-10-03
	SECOND SUBMITTAL	2019-12-03

Signature Anniversary 65
14190 East Evans Avenue
Aurora, Colorado 80014
engineeringservicesco.com
P 303.337.1393
F 303.337.7481
ESC ENGINEERING SERVICE COMPANY
Creative Solutions Since 1954
CIVIL ENGINEERS | LAND SURVEYORS

Title:
COVER SHEET

PENSKE EXPANSION - SITE PLAN
LOT 1, BLOCK 1 PENSKE SUBDIVISION FILING NO. 2
SITUATED IN THE NW 1/4 OF SECTION 29, T.3S., R.66W., OF THE 6TH P.M.
CITY OF AURORA, COUNTY OF ADAMS, STATE OF COLORADO

ESC Team: CMA, JB, JP	Date: 2019-10-03
Engineering No.: E-007-18	Scale: N.A. N.A.
Sheet No.: 1 OF 7	

File Name: N:\Projects\Penske\Aurora 15400 E. 32nd Ave\CAD\Site Plan\Penske - Aurora - Cover.dwg Plot Date: 12/3/2019 Company: ESC

PENSKE EXPANSION

SITE PLAN

LOT 1, BLOCK 1, PENSKE SUBDIVISION FILING NO. 2

SITUATED IN THE NW 1/4 OF SECTION 29, T.3S., R.66W. OF THE 6TH P.M.
CITY OF AURORA, COUNTY OF ADAMS, STATE OF COLORADO

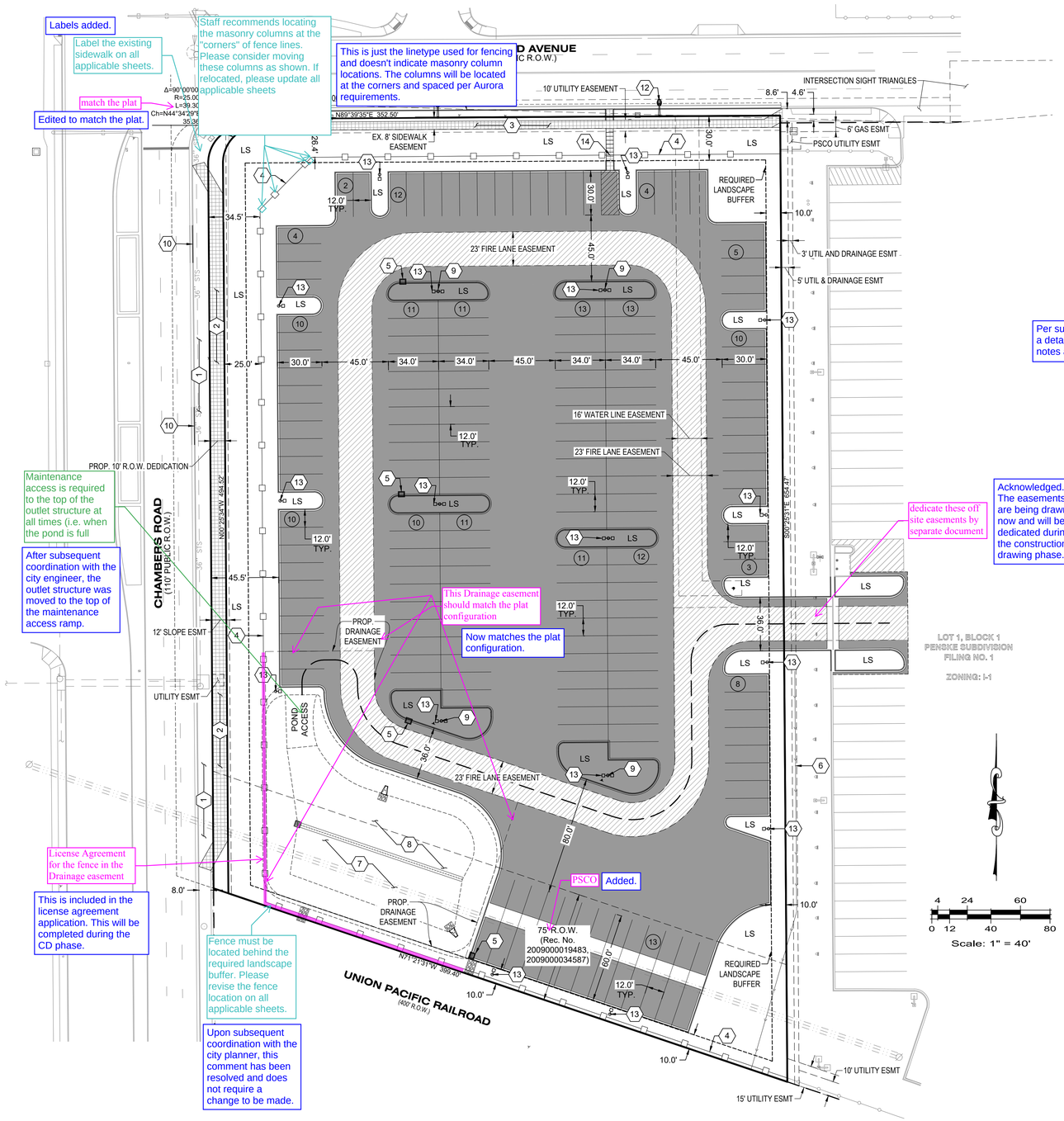

OVERALL SITE PLAN KEYED NOTES

1. EXISTING CONCRETE WALK TO BE REMOVED.
2. PROPOSED 10' WIDE DETACHED CONCRETE WALK AND 10' TREE LAWN.
3. PROPOSED 5.5' WIDE DETACHED CONCRETE WALK AND 7.5' TREE LAWN.
4. PROPOSED FENCE.
5. PROPOSED INLET.
6. PROPOSED SWALE.
7. PROPOSED DETENTION POND.
8. PROPOSED SNOW STORAGE AREA.
9. PROPOSED 'NO PARKING - FIRE LANE' SIGN
10. EXISTING DRIVEWAY/CURB CUT TO BE REMOVED.
11. CONSTRUCT NEW CURB ALONG EAST 32ND AVE.
12. PROPOSED STREET LIGHTS - REFER TO UTILITY PLAN FOR TYPE.
13. PROPOSED PARKING LOT LIGHTING - SEE SHEET 7.
14. MANUAL 4' GATE WITH RELEASING MECHANISM AND APPROVED KNOX HARDWARE.

Provide a gate detail

Per subsequent coordination, a detail is not required but the notes are added.

The following notes shall be shown within the detail or below the detail.

Signs shall have a minimum dimension of 12 inches wide by 18 inches high and have red letters on a white reflective background. "Fire Department Access Only"

Signs shall be located at all entry points and on both sides of said entrance in order to be seen by responding fire crews from either side of the gate.

The clearance to the bottom of the sign located adjacent to the gate and on the fence shall be between 5 ft & 7 ft from grade.

There shall be no other signs attached to the sign.

Notes added.

LEGEND

- DEVELOPMENT BOUNDARY
- PROPOSED CURB AND GUTTER
- EXISTING CURB AND GUTTER
- EXISTING OR PROPOSED EASEMENT
- # PARKING COUNT
- LS LANDSCAPING AREA
- PROPOSED ASPHALT PAVEMENT
- PROPOSED SIDEWALK
- PROPOSED FIRE LANE PAVEMENT
- PROPOSED STREET LIGHT
- DETENTION POND ACCESS ROUTE

BENCHMARK:

COA ID: 3S6629SW001
3" DIAM. BRASS CAP STAMPED (COA BM 3S6629SW001)ON EAST SIDE OF CHAMBERS ROAD BEING AT THE NORTHEAST CORNER OF THE INTERSECTION OF THE ENTRANCE TO MOBILE PRE-MIX & ALSO BEING 393' +/- NORTH OF CORNER TO SECTIONS 30, 29, 31 & 32, T.3.S., R.66W. OF THE 6TH P.M.
ELEVATION = 5374.46 FEET (NAVD 1988 DATUM)

Client:
PENSKE TRUCK LEASING CO., L.P.
5 CAPITAL DRIVE, SUITE 202
HARRISBURG, PENNSYLVANIA 17110-9477
ATTN: SEAN YENTSCH
PHONE: (844) 847-9518

No.:	Description:	Date:
	INITIAL SUBMITTAL	2019-10-03
	SECOND SUBMITTAL	2019-12-03

Signature Anniversary
ESC ENGINEERING SERVICE COMPANY
Creative Solutions Since 1954
CIVIL ENGINEERS | LAND SURVEYORS
14190 East Evans Avenue
Aurora, Colorado 80014
engineeringservicco.com
P 303.337.1393
F 303.337.7481

Title:
OVERALL SITE PLAN

PENSKE EXPANSION - SITE PLAN
LOT 1, BLOCK 1 PENSKE SUBDIVISION FILING NO. 2
SITUATED IN THE NW 1/4 OF SECTION 29, T.3S., R.66W. OF THE 6TH P.M.
CITY OF AURORA, COUNTY OF ADAMS, STATE OF COLORADO

ESC Team: CMA, JB, JP	Date: 2019-10-03
Engineering No.: E-007-18	Scale: 1" = 40' N/A
Sheet No.: 2 OF 7	

File Name: N:\Projects\Penske\Aurora-15600 E. 32nd Ave\CAD\Site Plan\Penske - Aurora - SP Overall Site Plan.dwg, Plot Date: 12/3/2019, Company: ESC

PENSKE EXPANSION

SITE PLAN

LOT 1, BLOCK 1, PENSKE SUBDIVISION FILING NO. 2

SITUATED IN THE NW 1/4 OF SECTION 29, T.3S., R.66W. OF THE 6TH P.M.
CITY OF AURORA, COUNTY OF ADAMS, STATE OF COLORADO

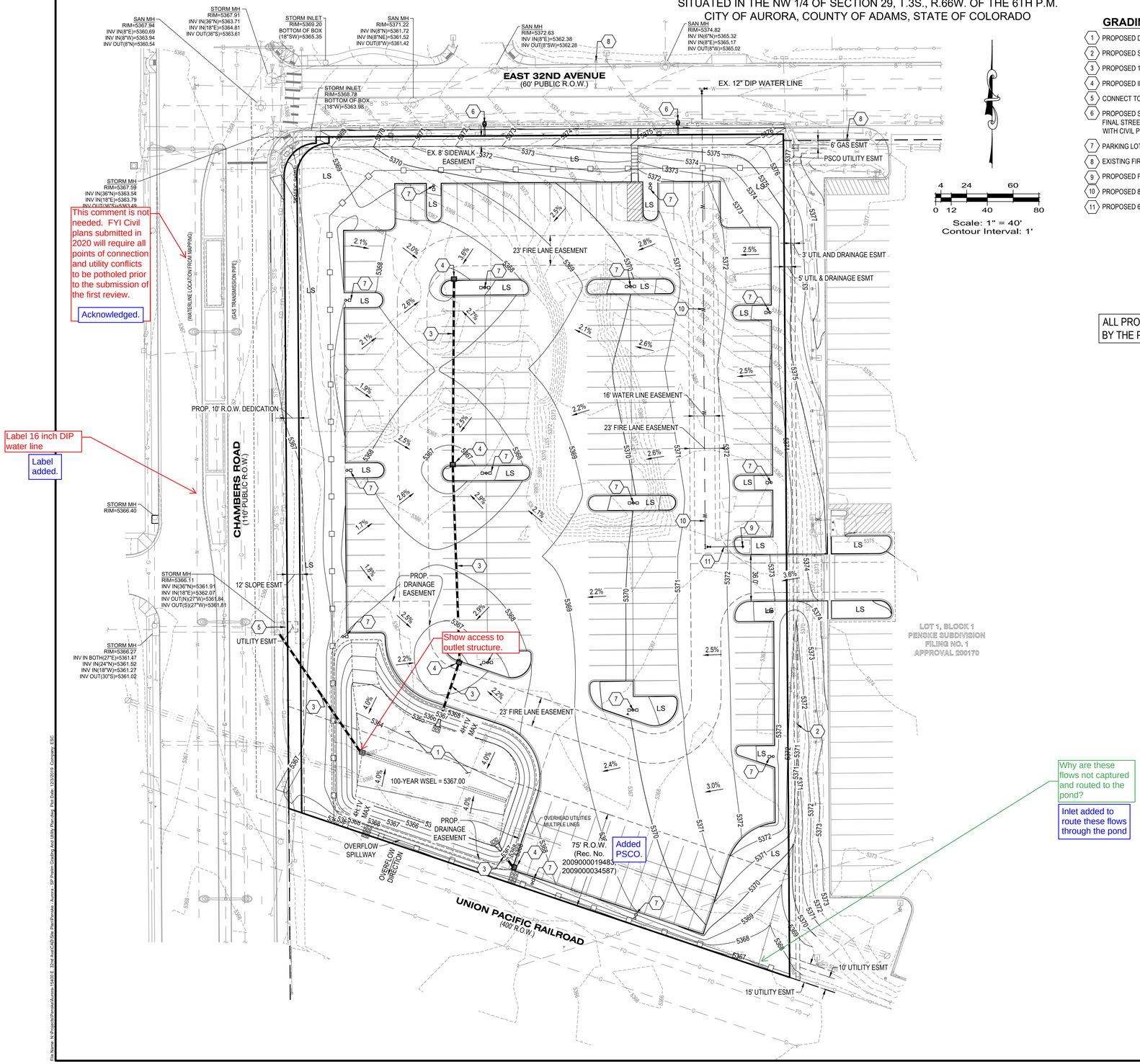

4 24 60
0 12 40 80
Scale: 1" = 40'
Contour Interval: 1'

GRADING AND UTILITY PLAN KEYED NOTES

1. PROPOSED DETENTION POND.
2. PROPOSED SWALE
3. PROPOSED 18" RCP STORM SEWER (PRIVATE).
4. PROPOSED INLET (PRIVATE).
5. CONNECT TO EXISTING INLET.
6. PROPOSED STREET LIGHT - AURORA TYPE SL-3 ON A 30' POLE. LOCATION SHOWN IS CONCEPTUAL. FINAL STREET LIGHT LOCATIONS WILL BE DETERMINED WITH STREET LIGHTING PLAN SUBMITTED WITH CIVIL PLANS.
7. PARKING LOT LIGHT POLES
8. EXISTING FIRE HYDRANTS
9. PROPOSED FIRE HYDRANT
10. PROPOSED 8" PVC WATER MAIN
11. PROPOSED 6" DUCTILE IRON FIRE LINE

LEGEND

- DEVELOPMENT BOUNDARY
- PROPOSED CURB AND GUTTER
- EXISTING CURB AND GUTTER
- EXISTING EASEMENT
- FLOW ARROW
- LS — LANDSCAPING AREA
- EX. FIRE HYDRANT
- PROP. FIRE HYDRANT
- 5620 — PROPOSED CONTOURS
- 5705 — EXISTING CONTOURS

ALL PROPOSED STORM SEWER TO BE PRIVATE AND MAINTAINED BY THE PROPERTY OWNER.

BENCHMARK:

COA ID: 3S6629SW001
3" DIAM. BRASS CAP STAMPED (COA BM 3S6629SW001)ON EAST SIDE OF CHAMBERS ROAD BEING AT THE NORTHEAST CORNER OF THE INTERSECTION OF THE ENTRANCE TO MOBILE PRE-MIX & ALSO BEING 393' +/- NORTH OF CORNER TO SECTIONS 30, 29, 31 & 32, T.3.S., R.66W. OF THE 6TH P.M.
ELEVATION = 5374.46 FEET (NAVD 1988 DATUM)

Client:
PENSKE TRUCK LEASING CO., L.P.
5 CAPITAL DRIVE, SUITE 202
HARRISBURG, PENNSYLVANIA 17110-9477
ATTN: SEAN YENTSCH
PHONE: (844) 847-9518

No.:	Description:	Date:
	INITIAL SUBMITTAL	2019-10-03
	SECOND SUBMITTAL	2019-12-03

Sapphire Anniversary 65
ESC ENGINEERING SERVICE COMPANY
Creative Solutions Since 1954
CIVIL ENGINEERS | LAND SURVEYORS
14100 East Evans Avenue
Aurora, Colorado 80014
engineeringservicesco.com
P 303.337.1393
F 303.337.7481

Title:
GRADING AND UTILITY PLAN

PENSKE EXPANSION - SITE PLAN
LOT 1, BLOCK 1 PENSKE SUBDIVISION FILING NO. 2
SITUATED IN THE NW 1/4 OF SECTION 29, T.3S., R.66W. OF THE 6TH P.M.
CITY OF AURORA, COUNTY OF ADAMS, STATE OF COLORADO

ESC Team: CMA, JB, JP	Date: 2019-10-03
Engineering No.: E-007-18	Scale: 1" = 40' N/A
Sheet No.: 3 OF 7	

File Name: N:\Projects\Penske\Aurora-154016_32nd Ave\CAD\Site Plan\Penske - Aurora - SP Prelim Grading And Utility Plan.dwg Plot Date: 12/3/2019 Company: ESC

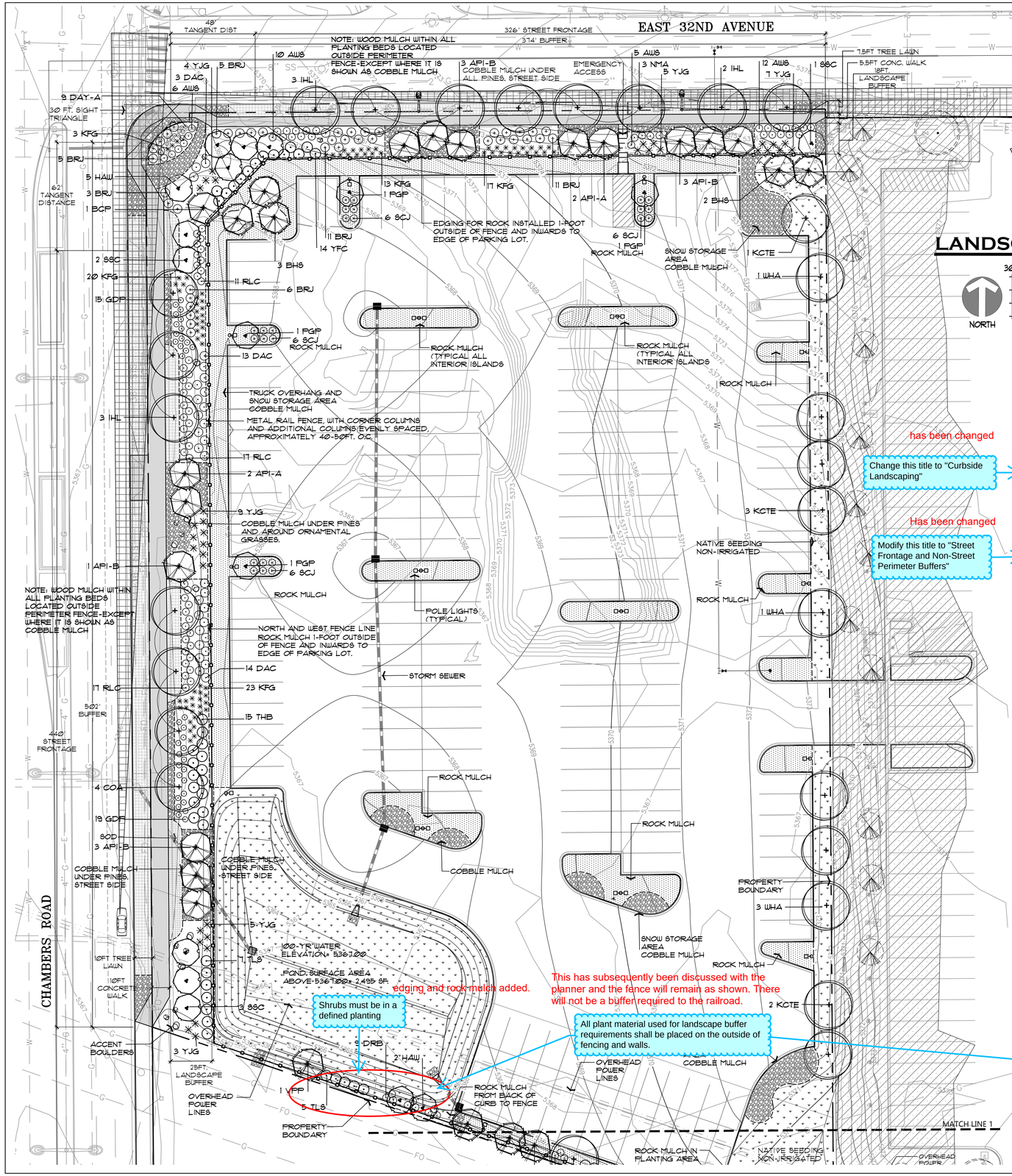

LANDSCAPE PLAN

NORTH

SCALE: 1" = 30'

SITE DATA

	AREA (sf)	%
TOTAL SITE AREA (5.10 ACRES- 222,281 SF.)	222,281	100.0%
OPEN SPACE REQUIRED: (15%) = 33,342 SF.		
HARD SURFACE AREA:	152,678	68.70%
LANDSCAPE AREA:	69,603	31.30%
MAXIMUM % OF COOL SEASON GRASSES ALLOWED:	22,970	33.0%
% OF COOL SEASON GRASSES PROVIDED:	1,570	2.30%

LEGEND

- DECIDUOUS SHADE TREES
- EVERGREEN TREES
- ORNAMENTAL TREES
- DECIDUOUS SHRUBS
- EVERGREEN SHRUBS
- GRASSES
- PERENNIALS
- ACCENT BOULDERS — BROWNSTONE BOULDERS, APPROXIMATE SIZE AS SHOWN, AND BURIED ⅓ THEIR ORIGINAL SIZE. OR SIMILAR BOULDER TYPE APPROVED BY DEVELOPER. AVAILABLE: THE ROCK GARDEN, FT. COLLINS, 970.472.1115
- GREEN STEEL EDGING — RYERSON STEEL EDGER, OR EQUAL.
- SOD — TEXAS HYBRID- THERMAL BLUE -DROUGHT RESISTANT, LOW WATER DEMANDING, AND LOW MAINTENANCE.
- EXISTING NATIVE — EXISTING NATIVE AREA, WITHIN DETENTION POND TO REMAIN UNDISTURBED. RE-SEED ANY AREA THAT IS SCARIFIED OR DAMAGED DURING CONSTRUCTION.
- PLANTING BEDS/WOOD MULCH — SHREDDED WESTERN RED CEDAR WOOD MULCH, 3" DEPTH WITH NO FABRIC. ALL PLANTING BEDS OUTSIDE PERIMETER FENCE. AS NOTED, UNLESS SHOWN AS COBBLE MULCH, OR NOTED AS ROCK.
- ROCK MULCH — CRUSHED RED GRANITE, 1" IN SIZE, PLACED OVER LANDSCAPE FABRIC, AND PLACED AT A 3" DEPTH. TOP OF MULCH COVER TO BE A MINIMUM OF 1" BELOW TOP OF CURB. ALL PLANTING BEDS INSIDE PERIMETER FENCE. AS NOTED, UNLESS SHOWN AS COBBLE.
- COBBLE MULCH: — COLORADO RIVER ROCK, 4"-8" IN SIZE, OVER FILTER FABRIC. FILL IN GAPS BETWEEN ROCK WITH PEA GRAVEL TO COVER ALL FABRIC.
- EXISTING -REMAIN UNDISTURBED — ALL AREAS OUTSIDE THE BOUNDARIES, OR ROW OF PROPOSED SITE, TO REMAIN UNDISTURBED

STANDARD REQUIREMENTS

~~STANDARD RIGHT OF WAYS~~

Change this title to "Curbside Landscaping"

	LANDSCAPE DESCRIPTION	STANDARD STREET FRONTAGE REQUIREMENT	LANDSCAPE REQ.	# TREES REQUIRED	# TREES PROVIDED	# SHRUBS REQUIRED	# SHRUBS PROVIDED
A	NORTH STREET FRONTAGE EAST 32ND AVE. (326 LF)	7.5 FT. TREE LAWN	1 TREE PER 40 L.F.	8	8	--	--
B	WEST STREET FRONTAGE CHAMBERS ROAD (440 LF)	10 FT. TREE LAWN	1 TREE PER 40 L.F.	11	0*	--	--

Has been changed — has been adjusted and note added

STREET PERIMETER AND NON-STREET BUFFERS

Modify this title to "Street Frontage and Non-Street Perimeter Buffers"

(ADD) ***NOTE**: Due to exiting underground utilities adjacent to Chambers Rd., street trees cannot be installed to meet the Curbside Landscape requirement. The required 11 trees are placed elsewhere on the site, but do not count toward meeting the trees required of other landscape standards.

	BUFFER DESCRIPTION/ LENGTH/ADJ. LAND USE	STANDARD BUFFER WIDTH/ BUFFER WIDTH PROVIDED	LANDSCAPE REQ.	# TREES REQUIRED	# TREES PROVIDED	# SHRUBS REQUIRED	# SHRUBS PROVIDED
A	NORTH PERIMETER BUFFER USE: E. 32ND AVE. LENGTH: 374 LF.	STANDARD BUFFER: 10 FT. BUFFER PROVIDED: ~~22 FT.~~ 18' 1 TREE & 10 SHRUBS PER 40 LF.	STANDARD DESIGN	10	12	94	78 5GAL 30 1GAL.
				NOTE: 2 EXTRA TREES USED TO REPLACE 20 SHRUBS			
B	EAST PERIMETER BUFFER USE: SAME USE LENGTH: N/A	N/A	N/A	–	12	–	---
C	SOUTH PERIMETER BUFFER USE: RAILROAD LENGTH: 363 LF.	STANDARD BUFFER: N/A BUFFER PROVIDED: 10 FT. 1 TREE & 5 SHRUBS PER 40 LF. (50% EVERGREEN)	STANDARD DESIGN	9	10	45	45 5GAL
D	WEST PERIMETER BUFFER USE: CHAMBERS ROAD LENGTH: 502 LF.	STANDARD BUFFER: 25 FT. BUFFER PROVIDED: 25 FT. 1 TREE & 10 SHRUBS PER 40 LF.	STANDARD DESIGN	13	20	126	154 5GAL. 43 1GAL.

adjusted

Number adjusted.

These trees are included.

OVERLAPPING LANDSCAPE STANDARDS. ~~STREET TREES ON CHAMBERS MAY ALSO BE COUNTED FOR PERIMETER BUFFER~~. TREES AND SHRUBS AT PERIMETER OF POND MAY ALSO BE COUNTED FOR SOUTH PERIMETER BUFFER (SECTION 146-1422(A)(3).

POND LANDSCAPE BUFFER

		SURFACE AREA ABOVE 100-YR WATER SURFACE	LANDSCAPE REQ.	# TREES REQUIRED	# TREES PROVIDED	# SHRUBS REQUIRED	# SHRUBS PROVIDED
A	DETENTION POND SOUTHWEST CORNER OF SITE	2,495 SF.	1 TREE AND 10 SHRUBS PER 4,000 SF. SURFACE AREA	1	3	7	14 5GAL.

OVERLAPPING LANDSCAPE STANDARDS. POND PERIMETER LANDSCAPE MATERIAL MAY ALSO BE USED TO MEET PERIMETER BUFFER REQUIREMENT.

(ADD) South added

PARKING LOT LANDSCAPE

	LANDSCAPE DESCRIPTION	TOTAL PARKING ISLANDS	LANDSCAPE REQ.	# TREES REQUIRED	# TREES PROVIDED	# SHRUBS REQUIRED	# SHRUBS PROVIDED
A	PARKING LOT PERIMETER	--	DOUBLE ROW HEDGE-3FT. TALL, SPACED @3FT O.C.	--	-- LANDSCAPE BUFFER PROVIDED	--	--
B	INTERIOR PARKING ISLANDS	21	1 TREE AND 6- 5GAL SHRUBS PER 9'x19' ISLAND	--	PER STANDARDS, NO LANDSCAPE REQUIRED FOR LANDSCAPE ISLANDS WITHIN PARKING FIELD OF FOR RENT VEHICLES		--

NOTE:
PER CITY OF AURORA'S STANDARDS, 1(ONE) TREE= 10-5GAL. SHRUBS= 30-1GAL. PERENNIALS

edging and rock mulch added.

Shrubs must be in a defined planting

This has subsequently been discussed with the planner and the fence will remain as shown. There will not be a buffer required to the railroad.

All plant material used for landscape buffer requirements shall be placed on the outside of fencing and walls.

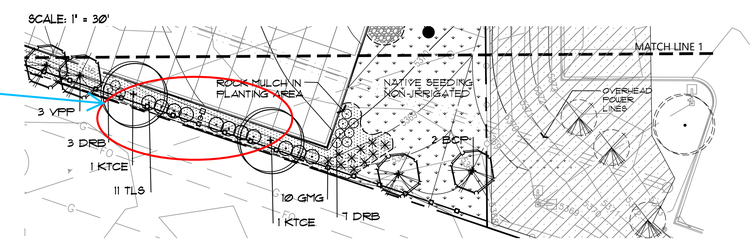

Know what's below. Call before you dig. CALL 811 WWW.CALL811.COM

No.:	Description:	Date:
1	CITY COMMENTS	12/3/19

Sapphire Anniversary 65

14190 East Evans Avenue
Aurora, Colorado 80014
P 303.337.1393
F 303.337.7481
T/F 1.877.273.0659

ESC ENGINEERING SERVICE COMPANY

Title: LANDSCAPE PLAN
PENSKE EXPANSION - SITE PLAN
LOT 1, BLOCK 1 PENSKE SUBDIVISION FILING NO. 2
SITUATED IN THE NW 1/4 OF SECTION 29, T.3S., R.66W. OF THE 6TH P.M.
CITY OF AURORA, COUNTY OF ADAMS, STATE OF COLORADO

Client: PENSKE TRUCK LEASING CO., L.P.
1 CAPITAL DRIVE, SUITE 202
READING, PENNSYLVANIA 17110-9477
ATTN: SEAN YENTSCH
PHONE: (844) 847-9518

Designed by: JCJ	Engineering No.: 00-545
Drawn by: JCJ	Date: 09/27/19
Checked by: RAJ	Scale: AS NOTED Horz.: Vert.:
Sheet No.: 4 OF 7	

LANDSCAPE SCHEDULE

ALL CHANGED TO 2.5-INCH CALIPER

All Deciduous Trees shall be 2.5" Cal.

KEY	QTY.	BOTANIC NAME	COMMON NAME	SIZE	WATER REQ.
DECIDUOUS TREES					
KCTE	8	GYMNACLADUS DIOCUS 'ESPRESSO'	ESPRESSO KENTUCKY COFFEETREE	2½" CAL.	XX
COA	4	QUERCUS MEHLENBERGII	CHINKAPIN OAK	2" CAL.	XX
WHA	5	CELTIS OCCIDENTALIS	WESTERN HACKBERRY	2" CAL.	XX
NMA	3	ACER PLATANOIDES 'ROYAL RED'	ROYAL RED NORWAY MAPLE	2" CAL.	XXX
IHL	8	GLEDITSIA TRIA. 'IMPERIAL'	IMPERIAL HONEYLOCUST	2" CAL.	XXX
PGP	4	PYRUS USSURIENSIS 'PRAIRIE GEM'	PRAIRIE GEM PEAR	2" CAL.	XX
EVERGREEN TREES					
API-A	4	PINUS NIGRA	AUSTRIAN PINE	6FT, HEIGHT	XXX
API-B	10	PINUS NIGRA	AUSTRIAN PINE	8FT, HEIGHT	XXX
BHS	5	PICEA GLAUCA 'DENSATA'	BLACK HILLS SPRUCE	6FT, HEIGHT	XXX
VPP	4	PINUS FLEXILIS 'VANDERWOLF'	VANDERWOLF LIMBER PINE	6FT, HEIGHT	XXX
BCP	3	PINUS ARISTATA	BRISTLECONE PINE	6FT, HEIGHT	XXX
ORNAMENTAL TREES					
HAW	7	CRATAEGUS MORDENENSIS 'TOBA'	WASHINGTON HAWTHRONE 'TOBA'	8FT., MULTISTEM	XXX
SSC	6	MALUS x SPRING SNOW	SPRING SNOW CRABAPPLE	~~1½"~~ CAL.	X

The Prairie Gem Pear should be classified as an Ornamental Tree

MOVED TO ORNAMENTAL LIST

All Ornamental Trees shall be 2" Cal.

CHANGED TO 2" CALIPER

KEY	QTY.	BOTANIC NAME	COMMON NAME	SIZE	WATER REQ.
DECIDUOUS SHRUBS					
RLC	45	RIBES 'RED LAKE"	RED LAKE CURRANT	5 GAL. CONT.	XX
GDP	34	POTENTILLA FRUIT. 'GOLD DROP'	GOLD DROP POTENTILLA	5 GAL. CONT.	XX
THB	15	RHAMNUS FRANGULA 'COLUMNARIS'	TALL HEDGE BUCKTHORNE	5 GAL. CONT.	X
TLS	23	RHUS TRILOBA	THREE LEAF SUMAC	5 GAL. CONT.	XXX
YFC	14	RIBES AUREUM	YELLOW FLOWERING CURRANT	5 GAL. CONT.	XX
AWS	33	SPIRAEA BUMALDA 'ANTHONY WATERER'	ANTHONY WATERER SPIREA	5 GAL. CONT.	X
DAC	30	VIBURNUM TRILOBUM 'COMPACTUM'	DWARF AMERICAN CRANBERRY	5 GAL. CONT.	X
DRB	19	CHRYSOTHAMNUS NAUSEOSUS	DWARF RABBITBURSH	5 GAL. CONT.	XXX
EVERGREEN SHRUBS/GRASSES/PERENNIALS					
BRJ	41	JUNIPERUS SABINA 'BROADMOOR'	BROADMOOR JUNIPER	5 GAL. CONT.	XX
SCJ	24	JUNIPERUS SABINA 'SCANDIA''	SCANDIA JUNIPER	5 GAL. CONT.	XX
YJG	33	MISCANTHUS SINENSIS 'YAKU JIMA'	YAKU JIMA MAIDEN GRASS	5 GAL. CONT.	XX
GMG	10	MISCANTHUS SINENSIS 'GOLIATH'	GOLIATH MAIDEN GRASS	5 GAL. CONT.	XX
KFG	76	CALAMAGROSTIS ACUTIFLORA	FEATHER REED 'KARLFORESTER'	1 GAL. CONT.	X
DAY-A	9	HEMEROCALLIS x 'RUFFLED APRICOT.'	APRICOT DAYLILY	1 GAL. CONT.	XX

NOT FOR CONSTRUCTION

PLANT WATER REQUIREMENTS ✳	
WATER REQUIREMENT	HYDROZONE
HIGH-WATER-USE	(WATER DEMANDING)
PLANT NEEDS 1" OF WATER PER WEEK	(ADAPTABLE-DRY)
PLANT NEEDS 1/2" OF WATER PER WEEK	(DRY)
✳PLANT NEEDS 1/2" OF WATER EVERY TWO WEEKS	(VERY DRY)

BASED ON:
"PLANTING TREES AND SHRUBS IN DRY CLIMATES", COLORADO NURSERY ASSOCIATION "LANDSCAPING FOR WATER CONSERVATION: XERISCAPE", AURORA'S RECOMMENDATIONS. "XERISCAPE PLANT GUIDE", FULCROM PUBLISHING

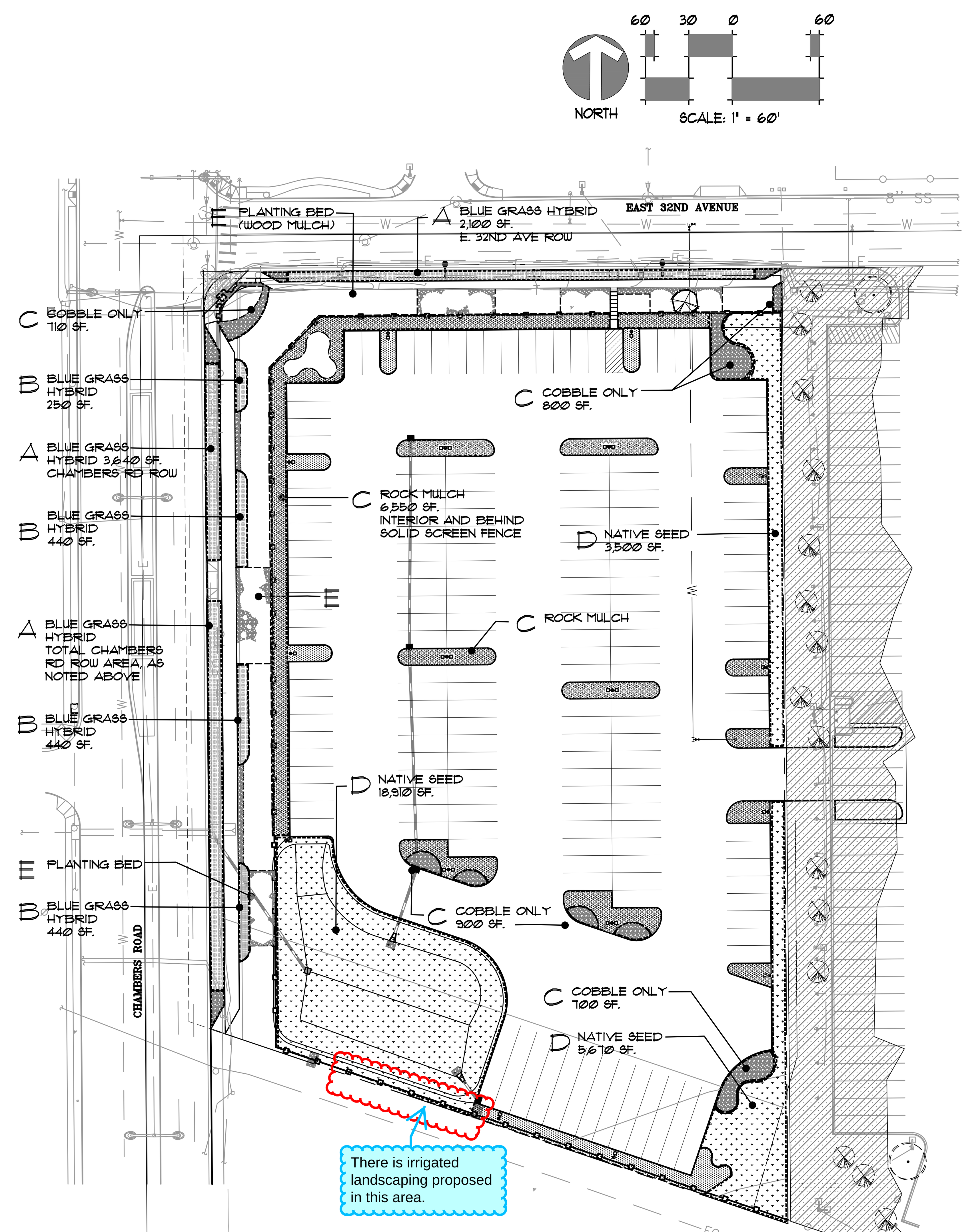

FENCE AND COLUMNN DETAIL

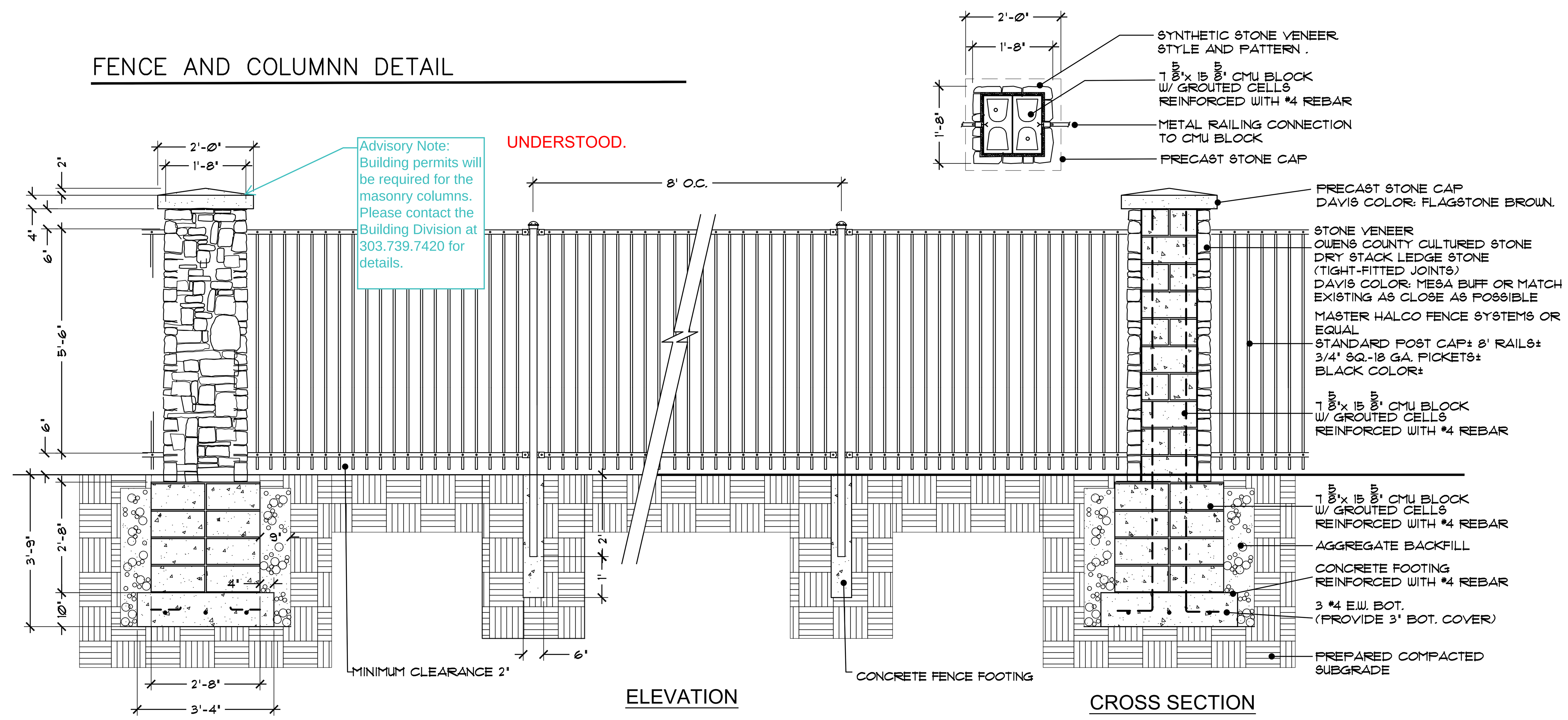

PROJECTED SITE HYDROZONES

AREA	SYMBOL	NON CONSERVING	NON CONSERVING	WATER CONSERVING	NON IRRIGATED
A SOD (RIGHT-OF-WAY)		5,740 SF			
B SOD (PRIVATE)			1,570 SF		
C COBBLE ONLY (PRIVATE)					1,510 SF
ROCK ONLY (PRIVATE)					6,550 SF
D SEEDED NON-IRRIGATED (PRIVATE)					28,080 SF
E PLANTING BEDS				31,893 SF.	
TOTALS		5,740 SF	1,570 SF	31,893 SF.	36,140 SF.

BREAKDOWN:
RIGHT-OF-WAY 5,740 SF
PRIVATE 69,603 SF

STANDARD LANDSCAPE NOTES

1. LANDSCAPE DESIGN COMPLIES WITH THE CITY OF AURORA'S DESIGN STANDARDS AND REGULATIONS.
2. ALL EXISTING TREES AND SHRUBS TO REMAIN, UNLESS NOTED DIFFERENTLY ON THE PLANS.
3. WOOD MULCH SHALL BE SHREDDED WOOD MULCH, AT LOCATION SHOWN ON THE PLAN. INSTALL AT A 3-INCH DEPTH, WITHOUT LANDSCAPE FABRIC. COBBLE MULCH SHALL BE 4" WASHED RIVER ROCK, PLACED TIGHTLY AND EVENLY. USE 1/8-1/4" PEA GRAVEL AS INFILL BETWEEN LARGER STONES. ALL ROCK MULCHED BEDS SHALL HAVE GEOTEXTILE WEED BARRIER INSTALL PRIOR TO PLACEMENT. NO WEED BARRIER IS TO BE VISIBLE.
4. WHENEVER POSSIBLE, EXISTING TOPSOIL SHALL BE STRIPPED TO A MINIMUM DEPTH OF FOUR(4") INCHES AND STOCKPILED FOR FUTURE USE. UPON COMPLETION OF SITEWORK, ADN PRIOR TO PLACEMENT OF COMPOST, THE TOPSOIL SHALL BE SPREAD OVER ALL AREAS BEING LANDSCAPED.
5. AREAS THAT ARE TO BE SODDED SHALL RECEIVE A MINIMUM OF 4 CUBIC YARDS PER 1,000 SF. OF AREA OF 'BLACK TEA' COMPOST, AS DISTRIBUTED BY BOSS COMPOST, BRIGHTON, COLORADO OR APPROVED EQUAL. COMPOST TO BE SPREAD EVENLY AND ROTOTILLED TO A DEPTH OF EIGHT(8") INCHES.
6. LIGHTING WILL BE POLE MOUNTED LIGHTS LOCATED AT THE PERIMETER OF THE PARKING LOT. ALL SITE AND BUILDING LIGHTING TO BE METAL HALIDE.
7. ALL SIDEWALKS, ENTRYWAYS AND CURB/GUTTER SHALL BE CONCRETE. DRIVE LANES AND PARKING LOT SURFACING WILL BE ASPHALT.
8. "ALL UTILITY EASEMENTS SHALL REMAIN UNOBSTRUCTED AND FULLY ACCESSIBLE ALONG THE ENTIRE LENGTH FOR MAINTENANCE EQUIPMENT ENTRY."
9. "THE DEVELOPER, HIS SUCCESSOR AND ASSIGNS SHALL BE RESPONSIBLE FOR INSTALLATION, MAINTENANCE AND REPLACEMENT OF ALL LANDSCAPE MATERIALS SHOWN OR INDICATED ON THE APPROVED SITE PLAN OR LANDSCAPE PLAN ON FILE IN THE PLANNING DEPARTMENT. ALL LANDSCAPING WILL BE INSTALLED AS DELINEATED ON THE PLAN, PRIOR TO ISSUANCE OF CERTIFICATE OF OCCUPANCY."
10. "ALL LANDSCAPED AREAS AND PLANT MATERIAL, EXCEPT FOR NON-IRRIGATED NATIVE, RESTORATIVE, AND DRYLAND GRASS AREAS THAT COMPLY WITH THE REQUIREMENTS FOUND IN SEC. 146-1429 AND/OR IN SEC. 146-1435, MUST BE WATERED BY AN AUTOMATIC UNDERGROUND IRRIGATION SYSTEM. IRRIGATION SYSTEM DESIGN, INSTALLATION, OPERATION AND MAINTENANCE SHALL CONFORM TO THE REQUIREMENTS FOUND IN THE CITY OF AURORA'S IRRIGATION ORDINANCE."
11. ALL PROPOSED LANDSCAPING WITHIN THE SIGHT TRIANGLES SHALL BE IN COMPLIANCE WITH COA ROADWAY SPECIFICATIONS, SECTION 4.04.2.10

FIRE LIFE SAFETY LANDSCAPE NOTES:

1. LANDSCAPE MATERIAL PLACEMENT SHALL NOT BE PLACED OR KEPT NEAR FIRE HYDRANTS, FIRE DEPARTMENT INLET CONNECTIONS, OR FIRE PROTECTION CONTROL VALVES IN A MANNER THAT WOULD PREVENT SUCH EQUIPMENT OR FIRE HYDRANTS FROM BEING IMMEDIATELY DISCERNIBLE. THE FIRE DEPARTMENT SHALL NOT BE DETERRED OR HINDERED FROM GAINING IMMEDIATE ACCESS TO FIRE PROTECTION EQUIPMENT OR HYDRANTS.
2. A 5-FOOT CLEAR SPACE SHALL BE MAINTAINED AROUND THE CIRCUMFERENCE OF FIRE HYDRANTS
3. LANDSCAPE MATERIAL SHOWN WITHIN THE SITE PLAN CANNOT ENCROACH INTO ROADWAYS THAT ARE DEDICATED (OR DESIGNATED) AS FIRE LANE EASEMENTS (OR CORRIDORS).

Know what's below. Call before you dig.
CALL 811
WWW.CALL811.COM
Or The One-call Center Of Colorado
WWW.UNCC.ORG
1-800-922-1987

No.:	Description:	Date:
1	CITY COMMENTS	12/3/19

Sapphire Anniversary 65
ESC ENGINEERING SERVICE COMPANY
Creative Solutions Since 1954
CIVIL ENGINEERS | LAND SURVEYORS
engineeringserviceco.com
14190 East Evans Avenue
Aurora, Colorado 80014
P 303.337.1393
F 303.337.7481
T/F 1.877.273.0659

Title: LANDSCAPE DETAILS
PENSKE EXPANSION - SITE PLAN
LOT 1, BLOCK 1 PENSKE SUBDIVISION FILING NO. 2
SITUATED IN THE NW 1/4 OF SECTION 29, T.3S., R.66W. OF THE 6TH P.M.
CITY OF AURORA, COUNTY OF ADAMS, STATE OF COLORADO

Client: **PENSKE TRUCK LEASING CO., L.P.**
5 CAPITAL DRIVE, SUITE 202
HARRISBURG, PENNSYLVANIA 17110-9477
ATTN: SEAN YENTSCH
PHONE: (844) 847-9518

Designed by: JCJ	Engineering No.: 00-545
Drawn by: JCJ	Date: 09/27/19
Checked by: RAJ	Scale: AS NOTED Horz.: Vert.:

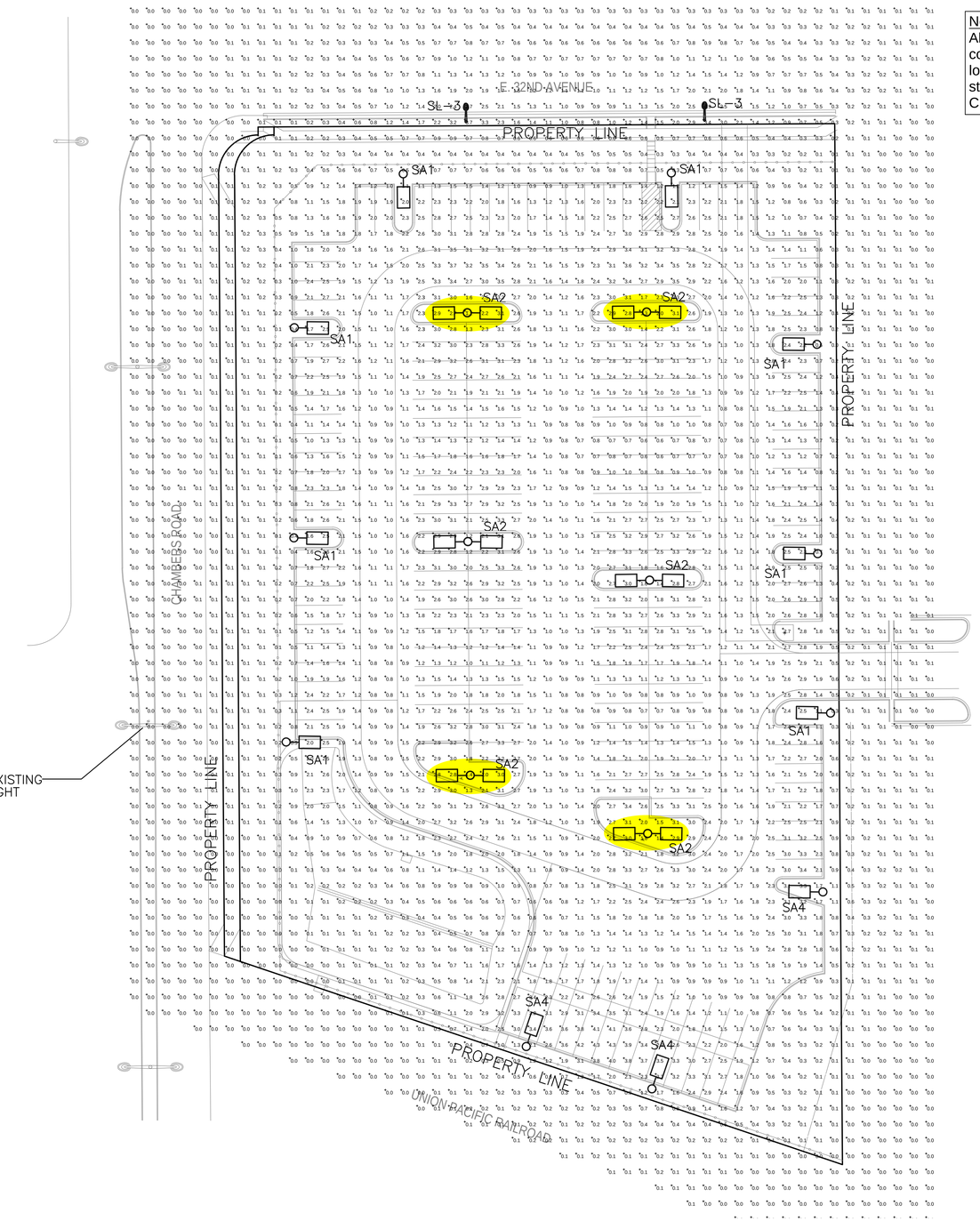

Note:
All street light locations shown are conceptual. Final street light locations will be determined with the street lighting plan submitted with the Civil Plans.

SITE PHOTOMETRIC SUMMARY

AVERAGE = 1.0 FT. CANDLE
MAXIMUM = 4.3 FT. CANDLE
MINIMUM = 0.0 FT. CANDLE

Note:
All luminaries, except those required for security, shall be extinguished within one hour after the end of business closing and remain extinguished until one hour before business opening. A maximum of 25 percent of the total luminaries used for parking lot illumination may remain in operation during this period to provide security.

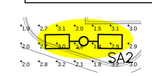

FIXTURES TO REMAIN IN OPERATION AFTER HOURS.

SITE PHOTOMETRIC PLAN

40' 0 20' 40' 80'
SCALE: 1"=40'
N

ENGINEERING CONSULTANTS INCORPORATED
ELECTRICAL ENGINEERS
8811 E. Hampden Ave. SUITE 200, DENVER, CO 80231
(303) 355-5534 (tel) walter@rgecinc.com

Know what's below. Call before you dig.
811 CALL 811
WWW.CALL811.COM
Or Text Keyword to 22828
1-800-922-1987

No.:	Description:	Date:

Sapphire Anniversary 65

ESC ENGINEERING SERVICE COMPANY
Creative Solutions Since 1964 Engineers Lands
engineeringserviceco.com
14190 East Evans Avenue
Aurora, Colorado 80014
P 303.337.1393
F 303.337.7481
T/F 1.877.273.0659

Title: PHOTOMETRIC PLAN
PENSKE - MAJOR SITE AMENDMENT
LOT 1, PENSKE SUBDIVISION FILING NO. 2
SITUATED IN THE NW 1/4 OF SECTION 29, T.3S., R.66W. OF THE 6TH P.M.
CITY OF AURORA, COUNTY OF ADAMS, STATE OF COLORADO

Client: PENSKE
5 CAPITAL DRIVE, SUITE 202
HARRISBURG, PENNSYLVANIA 17110-9477
ATTN: SEAN YENTSCH
PHONE: (844) 847-9518

FOR REVIEW ONLY
NOT FOR CONSTRUCTION

Designed by: SG	Engineering No.:
Drawn by: SG	Date: 10/02/19
Checked by: SG	Scale: Horz.: Vert.:
Sheet No.: 6 OF 7	

LIGHTING FIXTURE SCHEDULE – PARKING LIGHTS

ITEM	NO	MANUFACTURER	CAT. NO.	LAMPS	MT. HT	DESCRIPTION
SA1	8	HUBBELL	RAR1–160L–100–4K7–3–UNV–ASQ–BL	100 WATT 4000K LED 12,000 LUMENS	24'	SINGLE HEAD FULL CUT OFF POLE LIGHT ON 24 FT POLE, TYPE III OPTICS BACK LIGHT CONTROL
SA2	6	HUBBELL	RAR2–320L–110–4K7–3–UNV–ASQ–BL	110 WATT EA. 4000K LED 15,000 LUMENS	25'	TWO–HEAD FULL CUT OFF POLE LIGHT ON 25 FT POLE, TYPE III OPTICS
SA4	3	HUBBELL	RAR2–320L–110–4K7–4–UNV–ASQ–BL	110 WATT EA. 4000K LED 15,000 LUMENS	24'	SINGLE HEAD FULL CUT OFF POLE LIGHT ON 24 FT POLE, TYPE IV OPTICS BACK LIGHT CONTROL

LIGHTING FIXTURE SCHEDULE – STREET LIGHTS

ITEM	NO.	MANUFACTURER	CAT. NO.	LAMPS	WATT	COLOR	POLE HT	DESCRIPTION
SL–3	2	HEAD: GENERAL ELECTRIC POLE: MILLERBEND VALMONT	EVOLVE SERIES ERLH1–14–C3–30–A–GRAY–R SJ1–041–A–070–A–300–R–GV–NC2 DS210–800A300–D1–PC–GV–NC	3000K LED 13,400 INITIAL DELIVERED LUMENS	122	GRAY	30 FT	CITY STANDARD SINGLE POLE MOUNTED LED LIGHT ON 30 FT ROUND GALVANIZES STEEL POLE, 4 FT. ARM

NOTES:
ALL LUMINAIRES MUST BE EQUIPPED WITH A SURGE SUPPRESSION DEVICE WITH A MINIMUM IMMUNITY LEVEL OF 10 KV.
ALL LUMINAIRES SHALL BE EQUIPPED WITH A 0–10V DIMMING DRIVER.
ALL LUMINAIRES SHALL BE EQUIPPED WITH A CONTROL NODE.

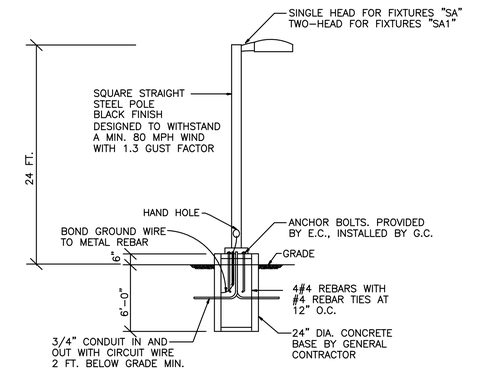

POLE MOUNTED FIXTURES INSTALLATION DETAIL FOR FIXTURE "SA" AND "SA1"

NO SCALE

FIXTURE "SA" AND "SA1"

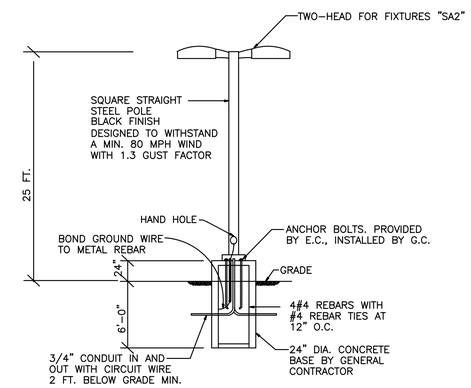

POLE MOUNTED FIXTURES INSTALLATION DETAIL FOR FIXTURE "SA2"

NO SCALE

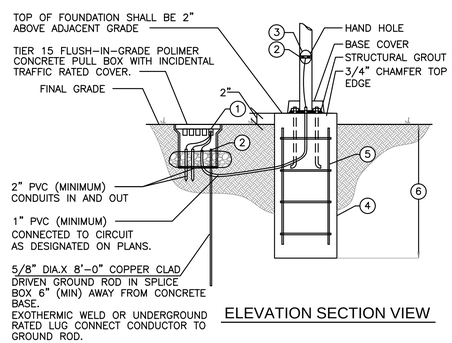

ELEVATION SECTION VIEW

GE
Evolve LED - ERL1

SL-2	4 foot arm	25 foot pole	6000 lumens
SL-3	4 foot arm	30 foot pole	14,000 lumens
SL-4	8 foot arm	30 foot pole	14,000 or 25,000 lumens

ELEVATION SECTION VIEW

1. BOND RACEWAY GROUND TO GROUND ROD IN PULL BOX.
2. BOND (1–#6 SOFT DRAWN BARE CU) TO GROUND ROD IN PULL BOX AND GROUNDING ROD IN POLE BASE HAND HOLE.
3. AT EACH POLE BASE HAND HOLE, PROVIDE A BREAKAWAY,WATERPROOF, IN–LINE FUSE HOLDER BY EATON OR APPROVED EQUAL WITH FNQ–R 15A FUSE FOR EACH HOT AND A BREAKAWAY, WATERPROOF CONNECTOR ON NEUTRAL (IF REQUIRED).
4. LIGHT STANDARD FOUNDATION EMBEDMENT DEPTH, DIMENSIONS AND REINFORCEMENT SHALL BE PER L10.1 OR AS DESIGNED BY A STRUCTURAL ENGINEER LICENSED IN THE STATE OF COLORADO.
5. ANCHOR BOLT CIRCLE SHALL BE 12 INCH DIAMETER AND CENTERED ON FOUNDATION.
6. DEPTH OF FOUNDATION PER L10.1 OR AS DESIGNED BY A STRUCTURAL ENGINEER LICENSED IN THE STATE OF COLORADO.

STREET LIGHT "SL–3" DETAIL PER CITY OF AURORA STANDARDS

NO SCALE

ENGINEERING CONSULTANTS INCORPORATED
ELECTRICAL ENGINEERS
8811 E. Hampden Ave. SUITE 200, DENVER, CO 80231
(303) 355-5534 (tel) walter@rgecinc.com

Know what's below. Call before you dig.
CALL 811
WWW.CALL811.COM
1-800-922-1987

No.:	Description:	Date:

ESC ENGINEERING SERVICE COMPANY
Creative Solutions Since 1964
ENGINEERS LAND SURVEYORS
engineeringservicecco.com
14190 East Evans Avenue
Aurora, Colorado 80014
P 303.337.1393
F 303.337.7481
T/F 1.877.273.0659

Title: PHOTOMETRIC DETAILS
PENSKE - MAJOR SITE AMENDMENT
LOT 1, PENSKE SUBDIVISION FILING NO. 2
SITUATED IN THE NW 1/4 OF SECTION 29, T.3S., R.66W. OF THE 6TH P.M.
CITY OF AURORA, COUNTY OF ADAMS, STATE OF COLORADO

Client: PENSKE
5 CAPITAL DRIVE, SUITE 202
HARRISBURG, PENNSYLVANIA 17110-9477
ATTN: SEAN YENTSCH
PHONE: (844) 847-9518

FOR REVIEW ONLY
NOT FOR CONSTRUCTION

Designed by: SG	Engineering No.:
Drawn by: SG	Date: 10/02/19
Checked by: SG	Scale: Horz.: Vert.:
Sheet No.: 7 OF 7	