JAG LOGISTICS CENTER AT DIA
CONTEXTUAL SITE PLAN
PART OF THE SOUTHEAST 1/4 OF SECTION 5
TOWNSHIP 3 SOUTH, RANGE 65 WEST OF THE 6TH PRINCIPAL MERIDIAN
CITY OF AURORA, COUNTY OF ADAMS, STATE OF COLORADO

SHEET 35 OF 42

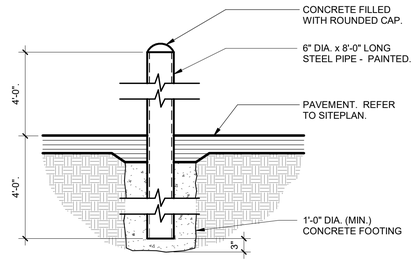

5 BOLLARD DETAIL
SCALE: 3/4" = 1'-0"

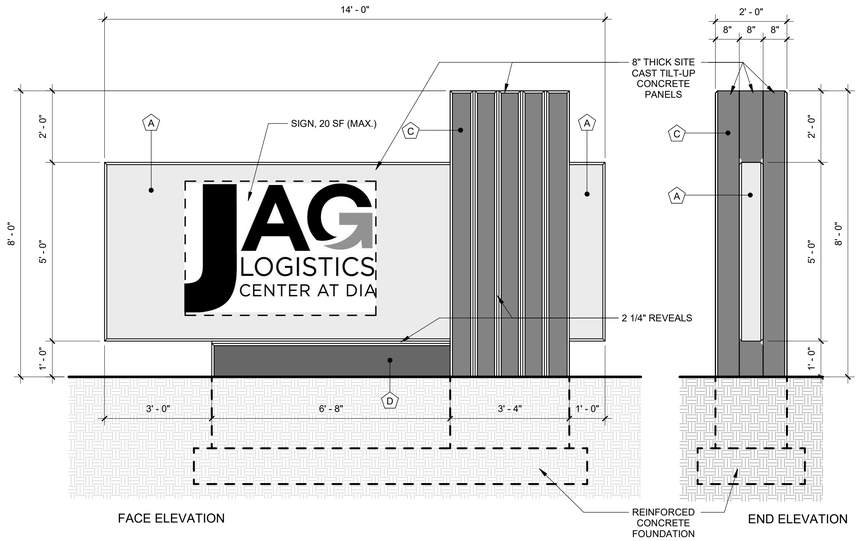

6 MONUMENT SIGN ELEVATIONS
SCALE: 1/2" = 1'-0"

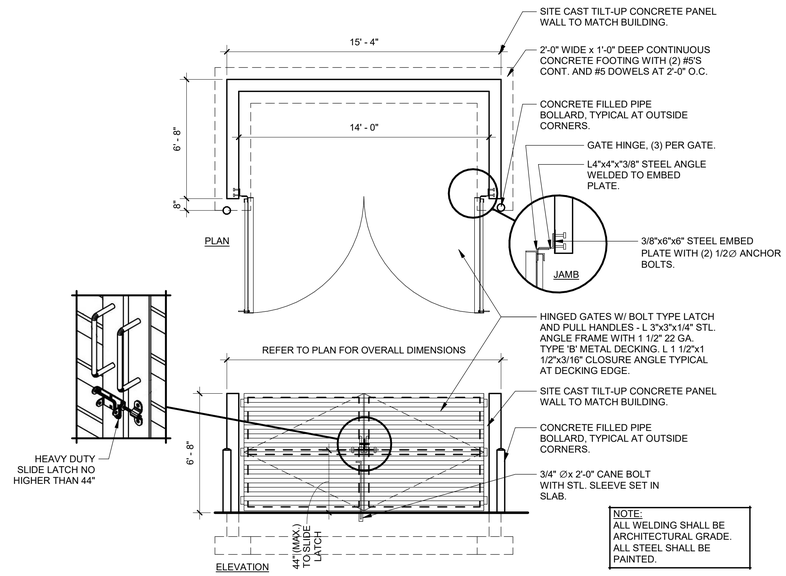

NOTE:
ALL WELDING SHALL BE ARCHITECTURAL GRADE.
ALL STEEL SHALL BE PAINTED.

3 TRASH ENCLOSURE DETAIL
SCALE: 1/4" = 1'-0"

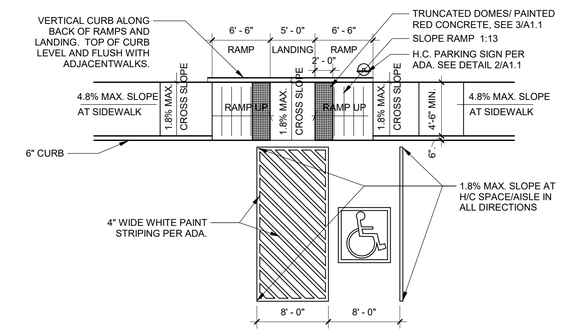

1 HC PARKING DETAIL - PLNG
SCALE: 1/8" = 1'-0"

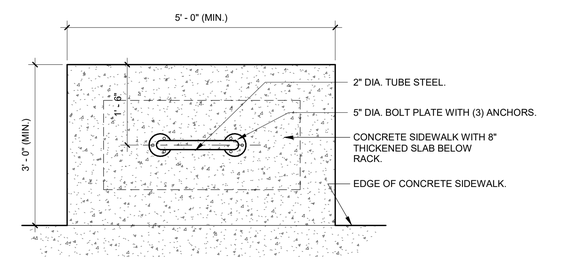

PLAN

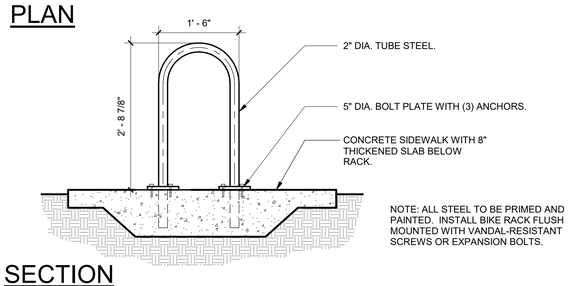

NOTE: ALL STEEL TO BE PRIMED AND PAINTED. INSTALL BIKE RACK FLUSH MOUNTED WITH VANDAL-RESISTANT SCREWS OR EXPANSION BOLTS.

SECTION

4 BIKE RACK DETAIL
SCALE: 3/4" = 1'-0"

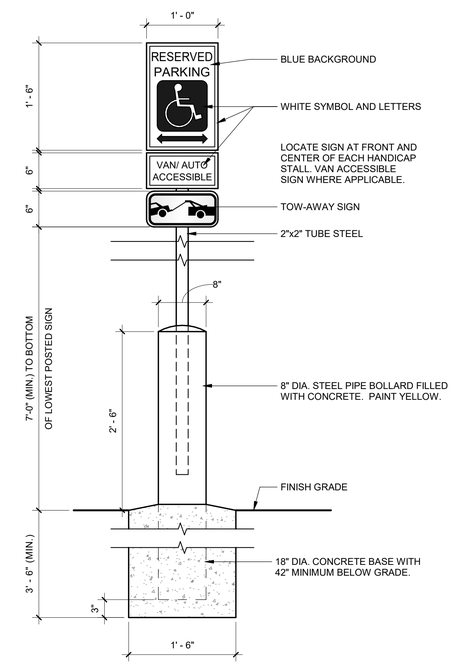

2 ACCESSIBLE PARKING SIGN DETAIL
SCALE: 1" = 1'-0"

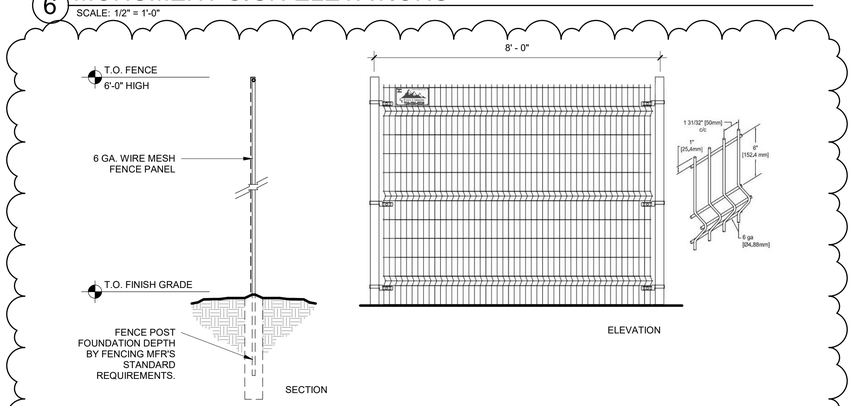

7 FENCE DETAIL
SCALE: 1/2" = 1'-0"

REF. NO.DA-1903-06

CS-10478A

INTERGROUP ARCHITECTS

■ architecture
■ planning
■ interiors
2000 West Littleton Blvd
Littleton, Colorado 80120
P. 303.738.8877 F. 303.738.2294
www.igarch.com

copyright 2018
These plans and written material are instruments of service and are the property of Intergroup, Inc. and may not be duplicated, disclosed or reproduced without the written consent of the Architect. Infringements will be prosecuted.

JAG LOGISTICS CENTER AT DIA
CONTEXTUAL SITE PLAN

DATE	DESC.
8-27-2018	PRE-SUB MTG
9-4-2018	1ST SUB.
11-8-2018	2ND SUB.
12-20-2018	3RD SUB.
1-29-2019	4TH SUB.
3-6-2019	5TH SUB.
4-12-2019	6TH SUB.
8-22-2019	7TH SUB.
10-11-2019	8TH SUB.
5-4-2020	MINOR AMEND.

CSP-35
SITE DETAILS

By:Author
5/4/2020 4:17:27 PM